ITC DOSING PUMPS

Cl_2 SENSOR

ESPAÑOL

CONTENTS

SAFETY RULES

In order to prevent personal risks and damages to the environment and to ensure the proper operation of the system, the staff in charge of the systems installation, start-up and maintenance should follow, the instructions of this manual, paying special attention to the explicitly detailed recommendations and warning. They should also follow the specific instructions on the chemical products to be dosed.

1.-GENERAL DESCRIPTION

Free chlorine amperometric sensor for drinking water and water treatment. Specifically designed to determine the residual level of inorganic chlorine in water.

The chlorine sensor is of the open cell type with no intermediate liquids for the electrochemical reaction, thus facilitating installation and maintenance. Since it is an open sensor it can be used in pressure applications and with solids in suspension.

Manufactured from materials that ensure perfect operation in applications such as:
- Drinking water desininfection
- Industrial processes
- Cooling towers
- Wastewaters reuse

2.- TRANSPORT AND HANDLING

The original packaging is designed to ensure that the transport and the storage of the system can be carried out without causing damages to the systems provided these processes are performed inside dry ventilated areas and away from sources of heat.

The packagin includes:

Free chlorine sensor
Instruction manual

3.-TECHNICAL FEATURES

- Potentiostatic amperometric sensor for measuring free chlorine

- Analyzable products: Cl_2, NaClO, $Ca(ClO)_2$

- Four- electrode system:
  - Working Electrode (Au)
  - Reference Electrode (Ag/AgCl)
  - Counter electrode (Au)
  - GND Electrode (Au)

-Scale reading 0.02-3.00 mg/l

- Precision: ± 2%

- WorKing conditions:
  - pH 6.5-9.0
  - Temperature 0-40ºC
  - Salinity: < 500 ppm Cl^-, <500 ppm SO_4^{2-}
  - Conductivity: 50 - 3000 uS/cm
  - Maximum pressure: 6 bar

- Polarization time: 30’ approx.

- Electrode cleaning: electrochemichal (WTR PRO control device)

- Protection: IP68

- Materials:
  - Body: PVC
  - Hydrodynamic regulator: PMMA
  - Sealing: FPM

4.-OPERATION

Amperometric analysis is based on the measurement of current intensity. This intensity is produced by the oxidation or reduction of an analyte when a suitable voltage is applied.

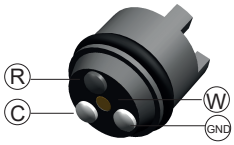

In the case of free chlorine analysis:

$$HClO + H^+ + 2e^- \xleftrightarrow[E]{} Cl^- + H_2O$$

As can be deduced from the above reaction, current intensity is proportional to the amount of hypochlorous acid which is present in the measured solution.

The chlorine reduction takes place in the gold working electrode (W) in which the suitable voltage is applied referred to in the reading we obtain from the reference electrode (R) Ag/AgCl. The electrical circuit is completed by using a gold auxiliary electrode (counterelectrode)(C). Finally, since the intensities generated are very low (in the nanoampere range), a fouth electrode in used in order to keep the signal as stable as possible. This electrodes also made of gold acts as a ground connection to eliminate any residual current that might be found in the water.

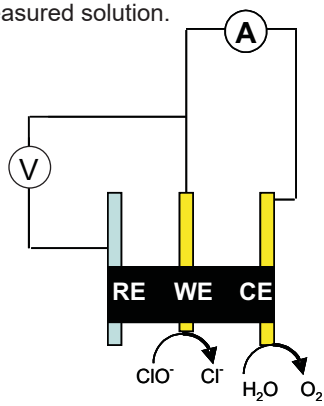

It is important to bear in mind that hypochlorous acid is a weak acid and thus the distribution of its species greatly depends on the pH of the water.

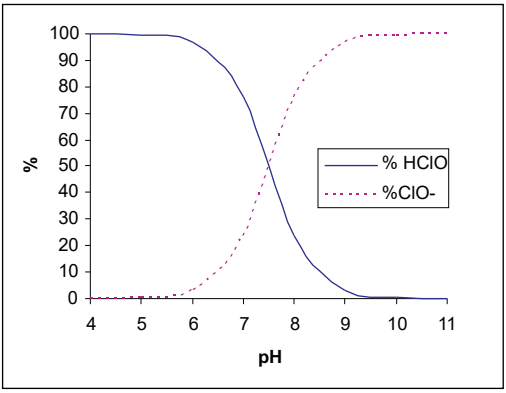

At the working voltage, the amperometric sensor responds not only to hypochlorous acid but also to hypochlorite. For this reason it is fundamental that the sensor response be compensated in accordance with the pH of the medium. With the WTRpro system, this correction is automatically carried out in the pH range of 6.5 to 9.0.
Outside this pH range, parasitic reations on the electrode surfaces make it impossible to correct the readings generated.

5.- INSTALLATION

The sensor must be installed where it is possible to ensure a constant flow of water with no chance of air bubbles forming in the measuring cell.

It is recommended that it be installed in the Multifunction Sensor Holder (Ref. 44-020), especially designed for this application, and equipped with the following:

① Flow regulator
② Cavity for temperature sensor
③ Flow detector
④ Input filter
⑤ Sampler
⑥ pH sensor cavity

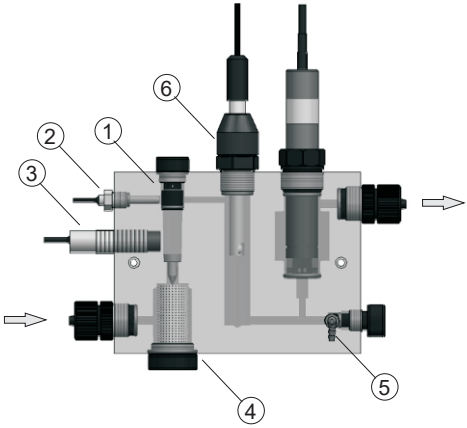

5.1 INSTALLATION IN MULTIFUNCTION SENSOR HOLDER REF. 44-020

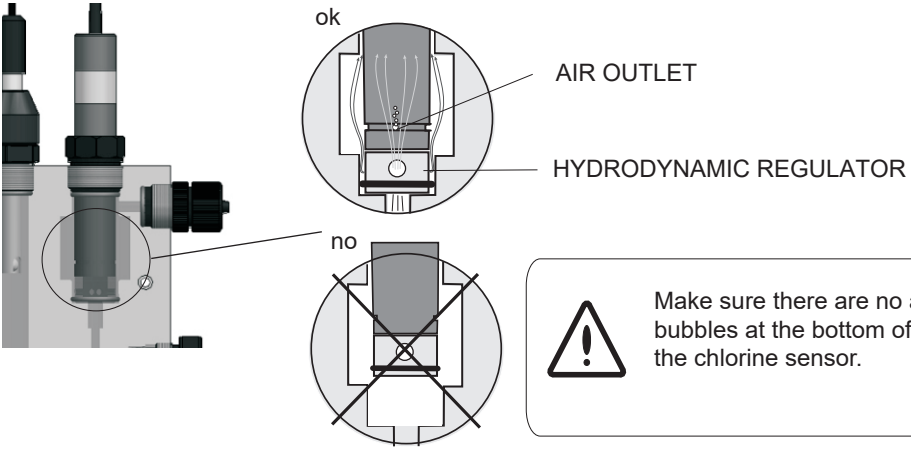

Make sure there are no air bubbles at the bottom of the chlorine sensor.

5.2 CONNECTIONS

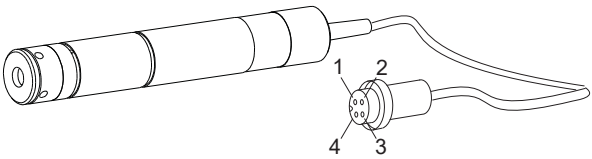

1 Working electrode
2 Counter electrode
3 Reference electrode
4 GND

6.- START-UP

6.1 SENSOR CONDITIONING

If it has not been used recently or if it is being connected for the first time, the sensor will require a conditionning time. Prior to sensor calibration, insert the sensor correctly into the sensor holder and let the water containing free chlorine flow for 24 hours to ensure that the cell is properly polarized. If the system start up can not be delayed 24 hours, wait one hour before calibration, and repeat the calibration after 24 hours.

6.2 SENSOR CALIBRATION

First point calibration: 0 mg/l
Once the sensor is properly conditioned let the water flow at 0 ppm until a stable reading is achieved.

To facilitate the calibration at 0 mg/l, the user should have an active carbon filter in by-pas before the sensor holder. This makes it possible to easily have the qater at 0 ppm.

Second point calibration:
Let the water with free chlorine flow for ten minutes.

Take a sample of the water, do a DPD-1 analysis in order to determine the free chlorine level of the sample, and introduce this value into the control device.

7.- MAINTENANCE

7.1 CLEANING AND CALIBRATION

Cleaning interval:
Every 8 hours and after working for several hours without flow, with water without free waste chlorine, or over 3 mg/l. This cleaning frequency is maintained automatically with the WTR PRO control device.

Calibration interval:
The first time, after 24 hours.
This will subsequently depend on the water conditions: 1-4 weeks

After disconnecting the system, wait 60 minutes for the correct polarization of the sensor. Calibrate, and after 24 hours repeat the calibration.

If the sensor has been working at 0 mg/l, without water flow, or without water, for 1 hour or more, an electrochemical cleaning will have to be Carried out. Then condition and calibrate the sensor once again.

The sensor can be passivated if it has been working for hours over 3 mg/l. Clean the sensor introducing it into a HCl 0.1M solution for 20 seconds. Then conditioning and calibrate again the sensor.

7.2 LIST OF PARTS

CODE	NAME
44-015	Chlorine sensor electrode head
44-016	Chlorine sensor body
44104	Ring holder for electrodes base
44106	Hydrodynamic regulator
62300	O-Ring 19x3 FPM
64349	O-Ring 14x2.5 FPM
64410	O-Ring 19x2 FPM

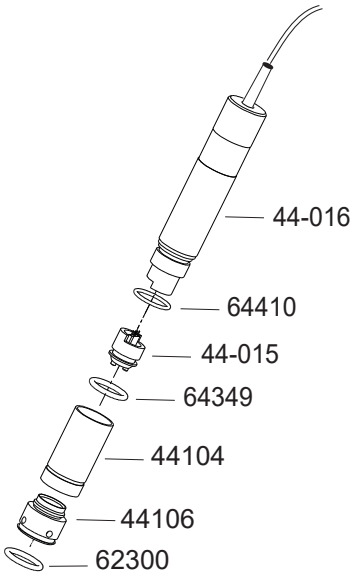

7.3 ELECTRODES HEAD REPLACE

Disassembling

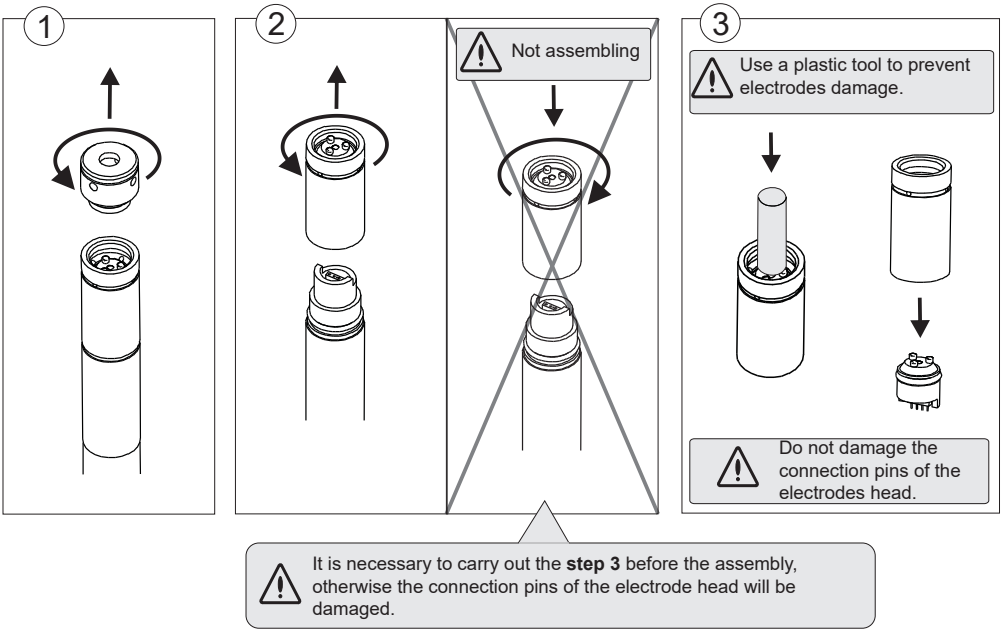

Assembling

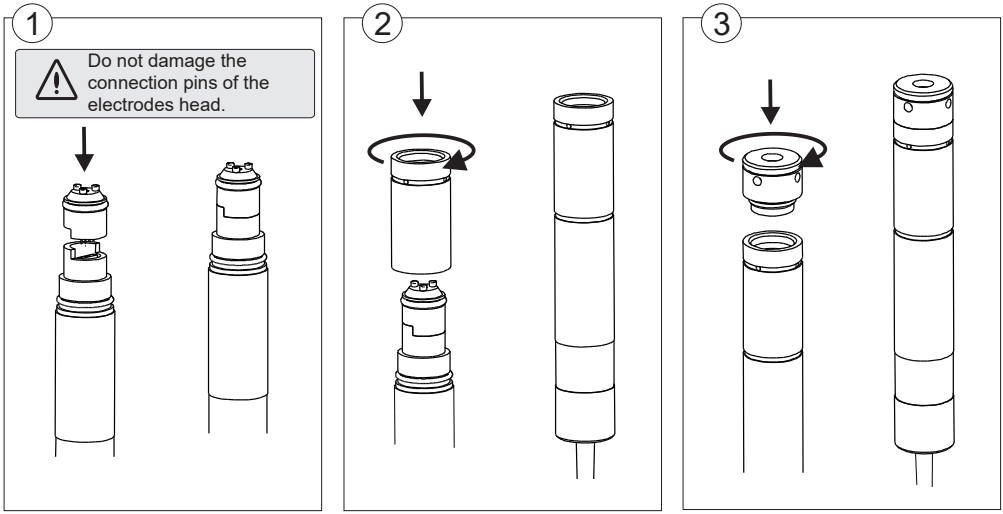

7.4 PROBLEM-CAUSE-SOLUTION

PROBLEMS	CAUSE	SOLUTION
READING mg/l = 0, DOES NOT MATCH WITH DPD-1 MEASUREMENT	Sensor fails to connect with control device	- Check connections
	Insufficient flow in sensor holder, or the chlorine sensor not in contact with the water	- Adjust the flow that reaches the sensor holder. Clean the sensor holder's filter and flow regulator.
	Air bubbles in the sensor measurement zone.	- Purge the sensor holder and ensure that no air is left in the measurement zone.
	The sensor has been measuring water without free chlorine for a few hours	- Let the water containing free chlorine flow around the sensor holder for 1 hour.
READING LOWER THAN THE DPD-1 MESURE	Insufficient flow in sensor holder	- Adjust the flow that reaches the sensor holder. Clean the sensor holder's fliter and flow regulator.
	Air bubbles in sensor measurement zone.	- Purge the sensor holder and ensure there is no air in the measurement zone.
	Sensor pasivado por trabajar a más de 3 ppm	- Realizar una limpieza electroquímica
	El pH del agua es más elevado que en el momento de la calibración, y no hay medida de pH en el controlador .	- Calibrar el sensor introduciendo el valor correcto de pH, o instalar un sensor de pH para efectuar la compensación automática.
	El pH es superior a 9, y por lo tanto está fuera de la zona de compensación.	-Ajustar el pH dentro del margen de pH admisible: 6.5-9

PROBLEMAS	CAUSA	SOLUCIÓN
LECTURA SUPERIOR A LA MEDIDA DPD-1	El sensor se ha calibrado sin esperar el tiempo suficiente de acondicionamiento	- Repetir acondicionamiento del sensor y volver a calibrar
	Reactivos DP-1 gastados	- Repetir medida DPD-1 con reactivos nuevos
	Medida DPD-1 incorrecta debido a una muestra de agua de salinidad elevada	- Incrementar el tiempo de espera en la reacción de los reactivos de la medida DPD-1
	Fallo en la estanqueidad del sensor	- Revisar juntas de estanqueidad del sensor
	El pH del agua es inferior que en el momento de la calibración, y no hay medida de pH en el controlador	- Calibrar el sensor introduciendo el valor correcto de pH, o instalar un sensor de pH para efectuar la compensación automática.
	El pH es inferior a 6.5, y por lo tanto está fuera de la zona de compensación.	-Ajustar el pH dentro del margen de pH admisible: 6.5-9
LECTURA INEST ABLE	Fallo en la conexión del sensor con el controlador	- Revisar conexiones
	Caudal de agua que llega al portasensores inestable, y el regulador de caudal no actúa.	- Estabilizar presión en la tubería donde se toma la muestra para el portasensores y revisar el regulador de caudal.
	Hay burbujas de aire en la zona de medición del sensor	- Purgar el portasensores y asegurar que no quede aire en la zona de medición.

PROBLEMAS	CAUSA	SOLUCIÓN
	Interferencias eléctricas externas	- Eliminar la fuente de la perturbación. Puede ser útil conectar el agua con una toma tierra.
	Interferencias de otros elementos oxidantes	- No utilizar más de un oxidante para la desinfección el agua.
	El pH es inestable y no hay medida de pH en el controlador	- Estabilizar el pH y conectar un sensor de pH en el controlador

DECLARACIÓN CE DE CONFORMIDAD

I.T.C S.L.
Vallès, 26
Polígono Industrial Can Bernades-Subirà
08130 Santa Perpètua de Mogoda

Declara que el Sensor de Cloro Libre, identificado con número de serie y año de fabricación cumple la Directiva de Compatibilidad Electromagnética D89/336/CE) siempre que la instalación, el uso y el mantenimientos se efectúen de acuerdo de acuerdo con la normativa vigente y siguiendo las indicaciones del manual de instrucciones.

Antón Planas
Gerente

GARANTIA

I.T.C. S.L. *garantiza el producto especificado en este documento por el periodo de 1 años a partir de la fecha de compra (excepto las partes que sufren desgaste como válvulas, juntas, conexiones, mangueras y filtro), contra todo defecto de fabricación o material, siempre que la instalación, uso y mantenimiento del equipo hayan sido los correctos.*

El equipo debe ser remitido, libre de gastos, a nuestro taller o servicio técnico de ***I.T.C. S.L****. acreditado y su devolución será efectuada a portes debidos.*

Deberá acompañar al equipo el documento de garantía con la fecha de compra y sello del establecimiento vendedor, o fotocopia de la factura de compra.

MODELO
_____

Nº SERIE
_____

Fecha de compra y sello del establecimiento vendedor

FECHA: _____

ITC DOSING PUMPS

Manual original

Ed:03/07/19-ES

C/ Vallès, 26 Pol. Ind. Can Bernades - Subirà
P.O. Box 60
08130 Santa Perpètua de Mogoda
BARCELONA

Tel. 93 544 30 40 *Fax 93 544 31 61*
e-mail: itc@itc.es *www.itc-dosing-pumps.com*