# MF: MOTOR B14-T71 ASSEMBLY MONTAJE
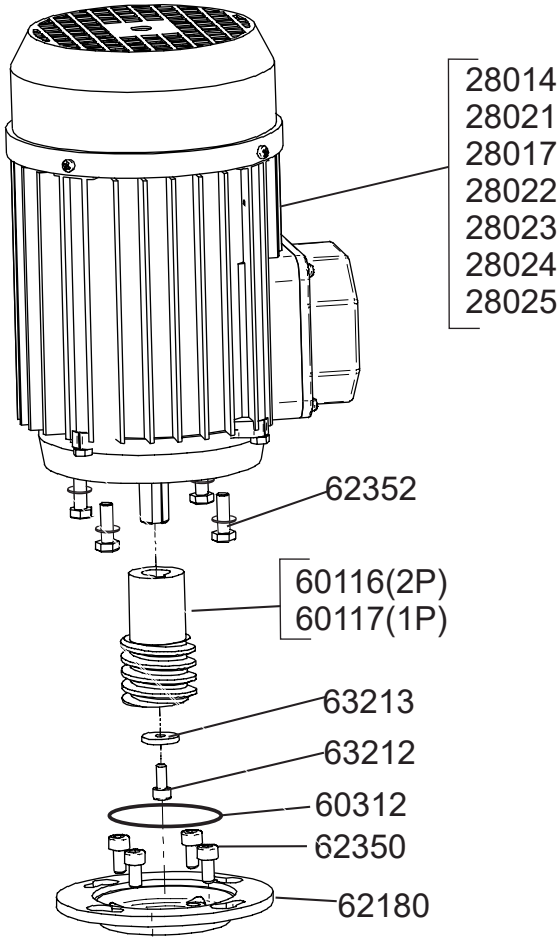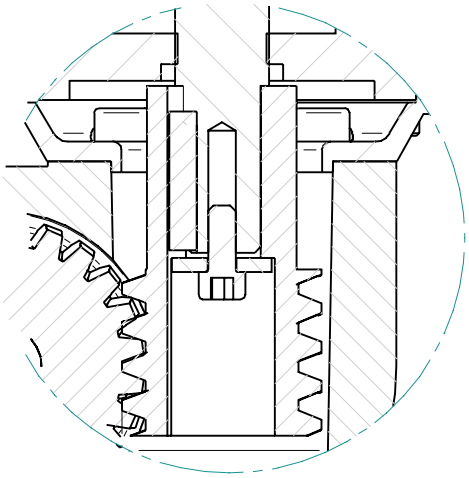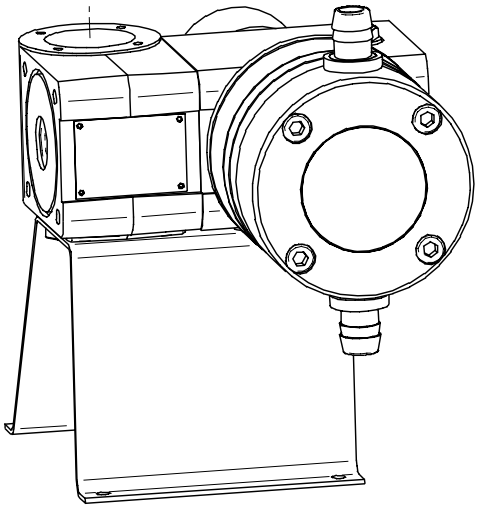
**MF031**